DS-2CE1AF1T-IT3
HD 3MP EXIR Bullet Camera

Key Features

- 3 Megapixel high-performance CMOS
- Analog HD output, up to 3MP resolution
- 2.8mm, 3.6mm, 6mm, 8mm, 12mm, 16mm lens
- True Day/Night
- OSD menu, DNR, Smart IR
- EXIR technology, up to 40m IR distance
- IP66 weatherproof
- Up the Coax(HIKVISION-C)

Specifications

Camera	
Image Sensor	3MP CMOS Image Sensor
Effective Pixels	2052(H)*1536(V)
Min. illumination	0.01 Lux @ (F1.2,AGC ON), 0 Lux with IR
Shutter Time	1/25s to 1/50,000s
Lens	2.8mm, 3.6mm, 6mm, 8mm, 12mm, 16mm lens @ F1.2
Lens Mount	M12
Day & Night	ICR
Angle Adjustment	Pan: 0° - 360°; Tilt:0° - 90°; Rotate: 0° - 360°
Synchronization	Internal Synchronization
Video Frame Rate	1920×1536@18fps
HD Video Output	1 Analog HD output
S/N Ratio	＞62dB
Menu	
AGC	Support
D/N Mode	Color/BW/SMART
White Balance	ATW/ MWB
BLC	Support
Functions	Wide Dynamic Range, Digital noise reduction, Mirror, SMART IR
General	
Operating Conditions	-40 °C – 60 °C (-40 °F – 140 °F), Humidity 90% or less (non-condensing)
Power Supply	12 VDC±15%
Power Consumption	Max. 5W
Protection Level	IP66
IR Range	Up to 40m
Communication	Up the coax, Protocol: HIKVISION-C (TVI output)
Dimensions	86.7mm×81.6mm×226mm (3.41″×3.23″×8.67″)
Weight	Approx. 680g (1.5lb)

Order Models

DS-2CE1AF1T-IT3

Dimensions

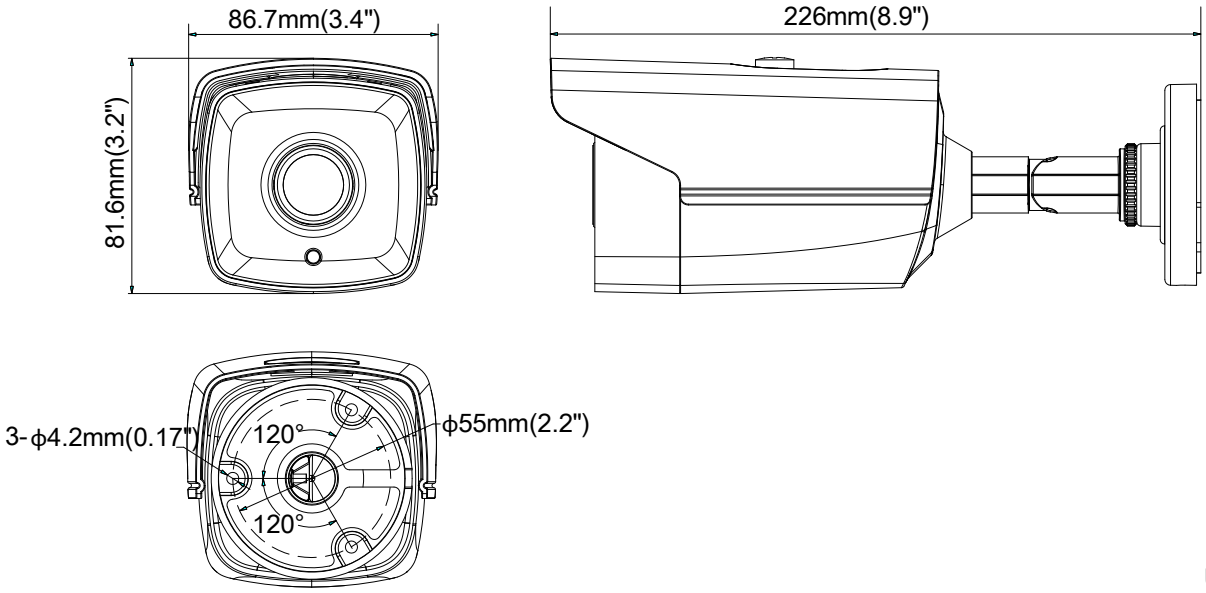

Unit: mm

Accessories

DS-1280ZJ-XS

Junction Box

DS-1H18

Video Balun

X41T

Camera Tester

Distributed by

Headquarters
No.555 Qianmo Road, Binjiang District,
Hangzhou 310051, China
T +86-571-8807-5998
overseasbusiness@hikvision.com

Hikvision USA
T +1-909-895-0400
sales.usa@hikvision.com

Hikvision Europe
T +31-23-5542770
saleseuro@hikvision.com

Hikvision Middle East
T +971-4-8816086
salesme@hikvision.com

Hikvision Russia
T +7-495-669-67-99
saleru@hikvision.com

Hikvision India
T +91-22-28469900
sales@pramahikvision.com

Hikvision Italy
T +39-0438-6902
info.it@hikvision.com

Hikvision France
T +33(0)1-85-330-444
info.fr@hikvision.com

Hikvision Spain
T +34-91-737-16-55
info.es@hikvision.com

Hikvision Poland
T +48-22-460-01-50
poland@hikvision.com

Hikvision UK
T +44-1628-9021-4
support.uk@hikvision.com

Hikvision Singapore
T +65-6684-4718
sg@hikvision.com

Hikvision Oceania
T +61-2-8599-4233
salesau@hikvision.com

Hikvision Hong Kong
T +852-2151-1761

Hikvision Canada
T +1-909-895-0400
sales.usa@hikvision.com

© Hikvision Digital Technology Co., Ltd. 2016 | Data subject to change without notice | **20160118**