CP PLUS

CP- UVP-F2520L15-D

2 MP 1080P HDCVI IR PTZ Camera

ORANGE

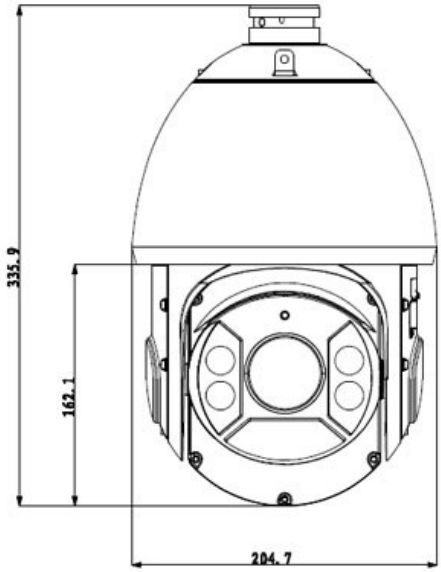

Main Features

- 1/2.8" 2Megapixel CMOS Image sensor
- Max. 25/30fps@1080P, 25/30/50/60fps@720P
- Powerful 25x Optical and 16x Digital zoom
- WDR(120dB), 3D DNR
- Up to 300 presets, 8 auto scan, 8 tour, 8 auto pan, 5 pattern
- IR Range of 150 Mtr.
- Max 240°/s pan speed, 360° endless pan rotation
- Built-in 2/1 alarm in/out, IP66
- Mobile Software: iCMOB, gCMOB
- CMS Software: KVMS Pro, vOptimus Pro

1/2.8" CMOS | 2MP 1080P | ZOOM 25x | WDR Wide Dynamic Range | IP66 | AGC Auto Gain Control | Automatic White Balance | Backlight Compensation

CE FC RoHS COMPLIANT

Product casing and specifications are subject to change without prior notice

CP PLUS

CP- UVP-F2520L15-D

2 MP 1080P HDCVI IR PTZ Camera

ORANGE

Feature	Specification
Image Sensor	1/2.8" PS CMOS Image Sensor
Effective Pixels	1920(H) x 1080(V), 2 Megapixels
Video Output	1-channel BNC HDCVI high definition video output/ CVBS standard definition video output (switchable)
S/N Ratio	More than 55dB
Minimum Illumination	Color: 0.005Lux@F1.6 ; 0Lux@F1.6 (IR on)
Focal Length	4.8mm~120mm
Focus Control	Auto / Manual
White Balance	Auto, ATW, Indoor, Outdoor, Manual
Close Focus Distance	100mm~ 1000mm
Angle of View	H: 59.2° ~ 2.4°
Electronic Shutter	1/3s~1/300,000s
AGC control	Auto / Manual
Back Light Compensation	BLC / HLC / WDR(120dB)
Optical Zoom	25x
Digital Zoom	16x
Pan Travel	0°~360° endless, Pan Speed: 0.1° ~160° /s
Tilt Travel	-15° ~ 90° auto flip 180°, Tilt Speed: 0.1° ~120° /s
Manual Speed	Pan: 0.1° ~160° /s; Tilt: 0.1° ~120° /s
Presets	300
Preset Speed	Pan: 240° /s; Tilt: 200° /s
Privacy Masking	Up to 24 areas
Special Features	IR Range upto 150m, Up to 300 Presets, 8 Tour, 5 Pattern, 8 Auto scan, Auto Pan
Power up Action	Auto restore to previous PTZ and lens status after power failure
Idle Motion	Activate Preset/ Scan/ Tour/ Pattern if there is no command in the specified period
Day/Night: IR Cut Filter	Auto (ICR) / Color / B/W
Video Compression	1080P(1920×1080) / 720P(1280×720)
Video Streaming	25/30fps@1080P, 25/30/50/60fps@720P
Audio Streaming	1 channel In
Networking	1 RS485
Protocols	Pelco-P/D (Auto recognition)

CE FC RoHS COMPLIANT

Product casing and specifications are subject to change without prior notice

CP PLUS

CP- UVP-F2520L15-D

2 MP 1080P HDCVI IR PTZ Camera

ORANGE

Feature	Specification
Alarm	2/1 channel In/Out
Operating Temperature	-40ºC ~ 60ºC / Less than 90% RH
Weather Proof Standard	IP66
Dimension	Φ204.7(mm) x 359.9(mm)
Weight	7.8kg
Power Source	AC24V/3A(±10%)
Power Consumption	13W,23W (IR on)

CE FC RoHS COMPLIANT

*Product casing and specifications are subject to change without prior notice